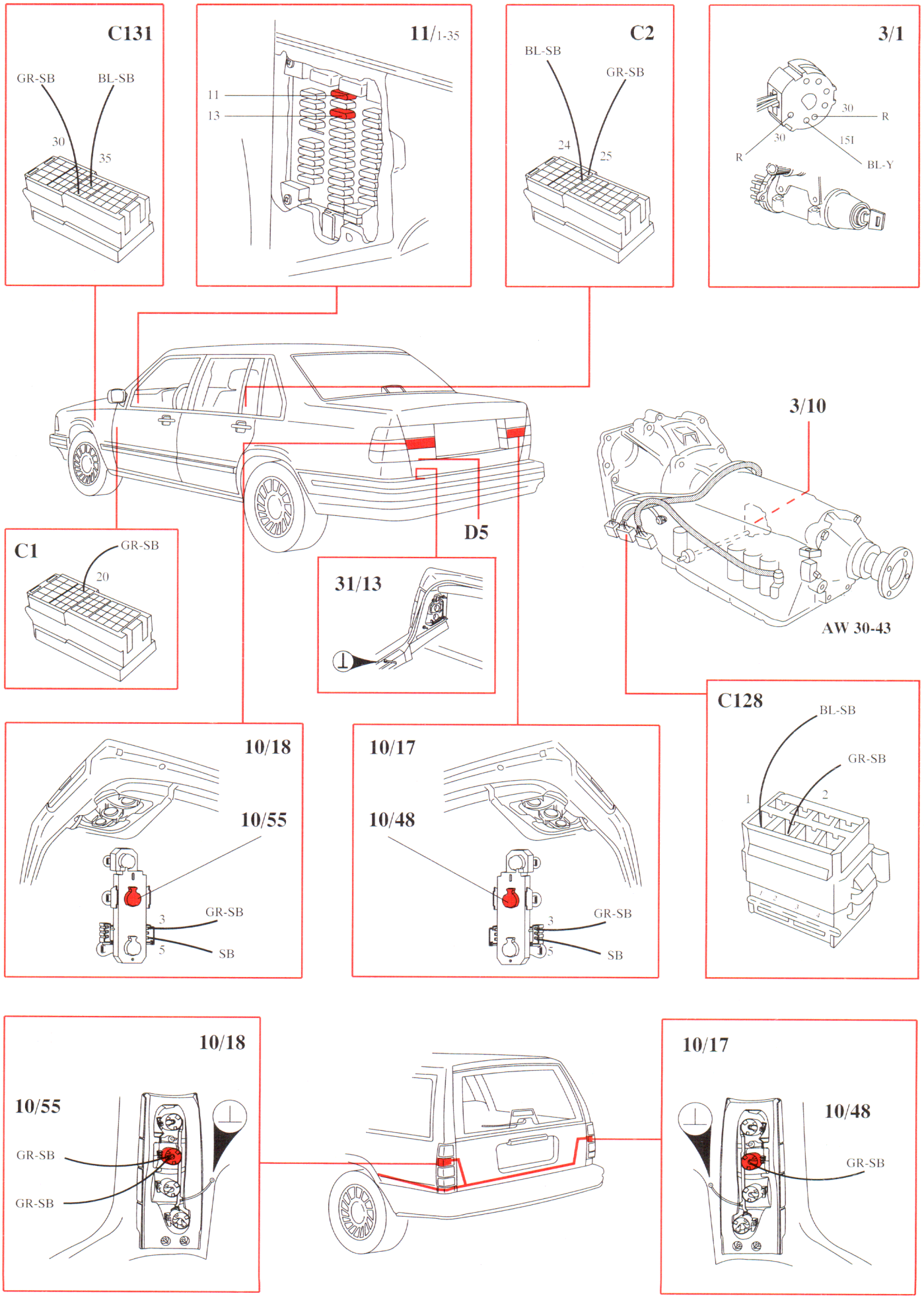
C131
GR-SB
BL-SB
30
35
11/1-35
11
13
C2
BL-SB
GR-SB
24
25
3/1
30
R
30
15I
R
BL-Y
3/10
AW 30-43
D5
C1
GR-SB
20
31/13
C128
BL-SB
GR-SB
1
2
10/18
10/55
GR-SB
3
5
SB
10/17
10/48
GR-SB
3
5
SB
10/18
10/55
GR-SB
GR-SB
10/17
10/48
GR-SB