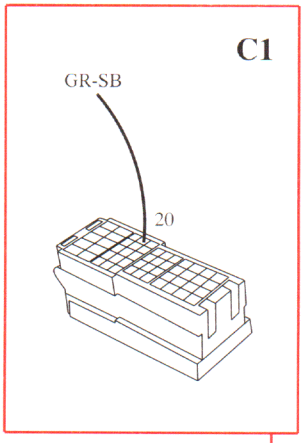
C1
GR-SB
20

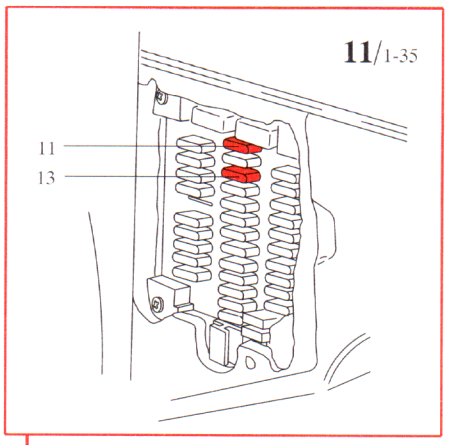
11/1-35
11
13

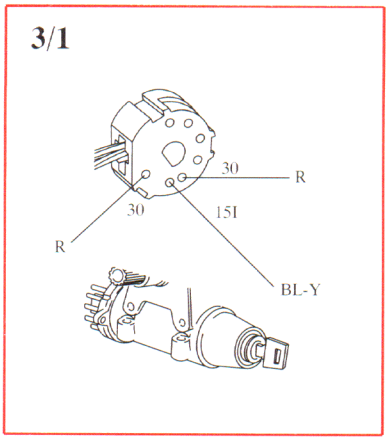
3/1
30
R
30
15I
R
BL-Y

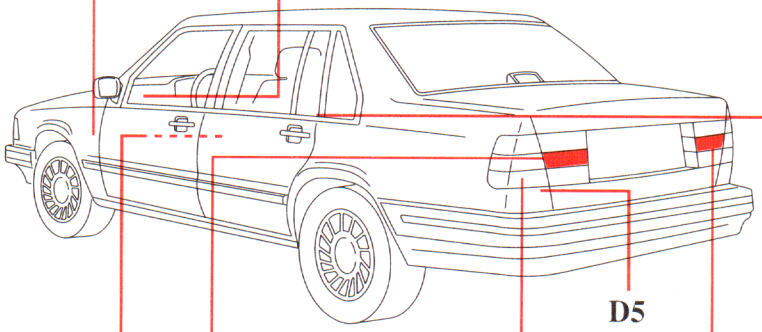
D5

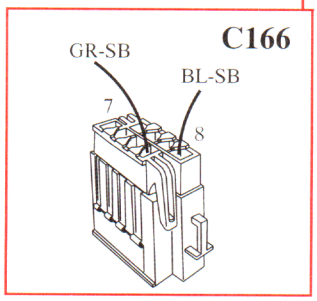
C166
GR-SB
BL-SB
7
8

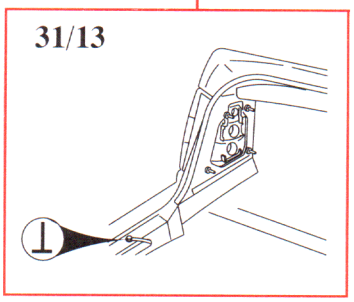
31/13

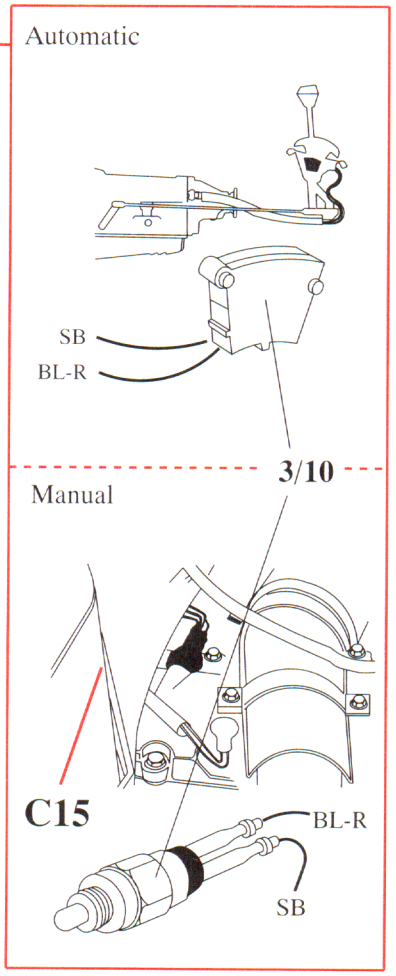
Automatic
SB
BL-R
3/10
Manual
C15
BL-R
SB

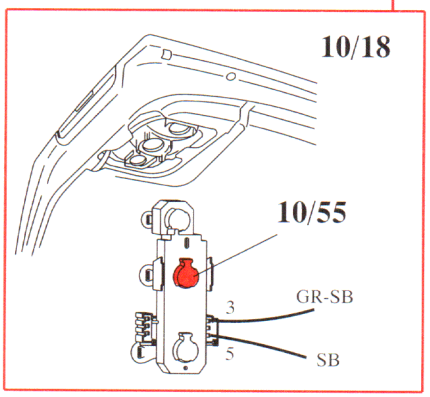
10/18
10/55
3
GR-SB
5
SB

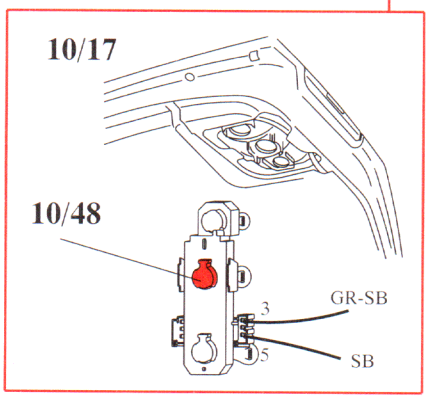
10/17
10/48
3
GR-SB
5
SB

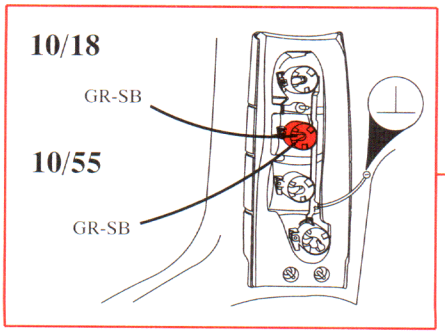
10/18
GR-SB
10/55
GR-SB

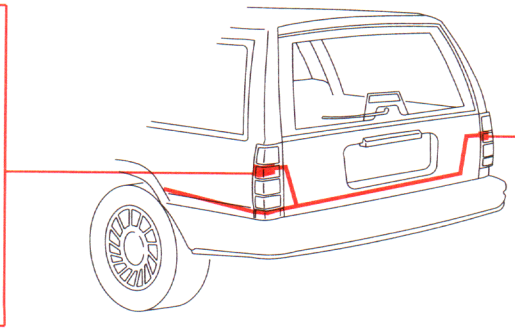

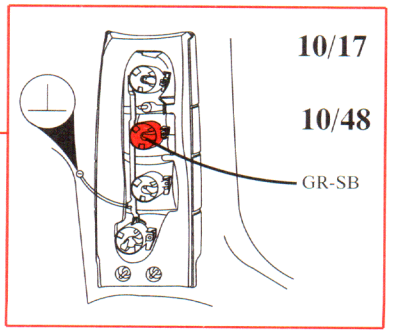
10/17
10/48
GR-SB