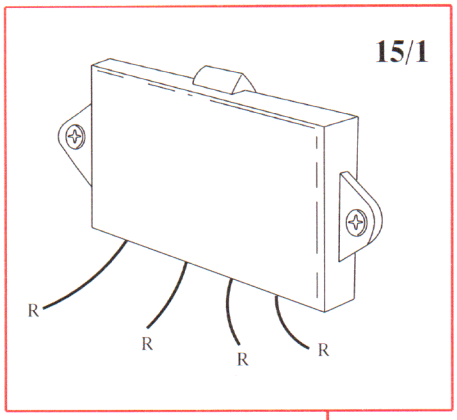
15/1
R
R
R
R

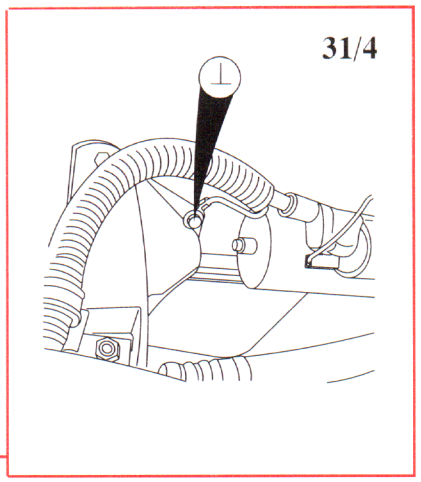
31/4

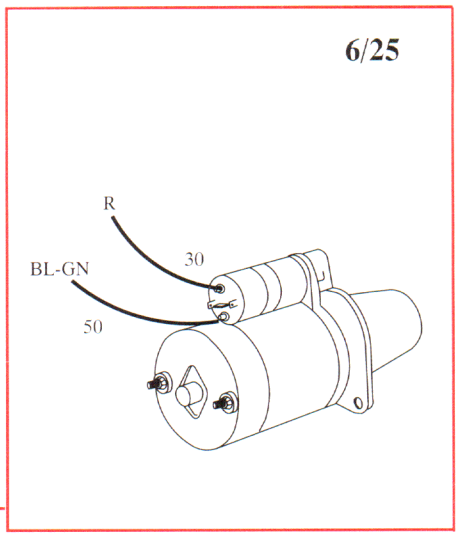
6/25
R
30
BL-GN
50

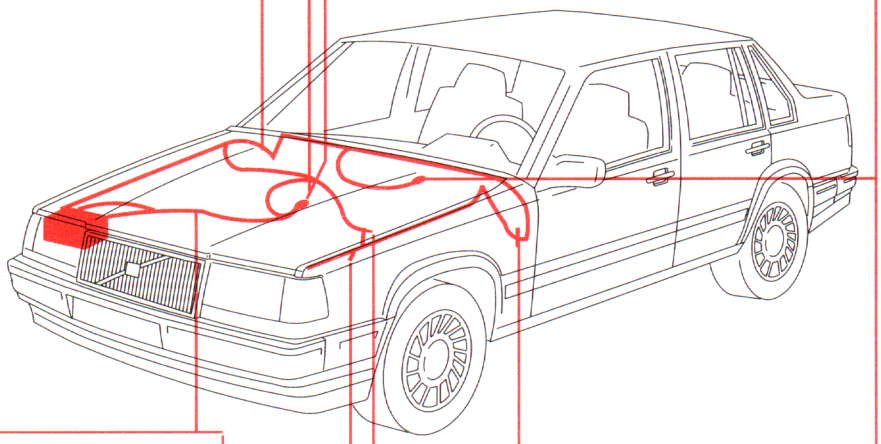

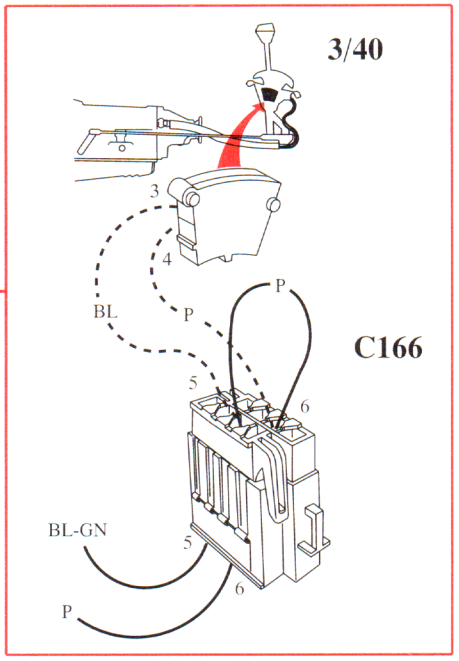
3/40
3
4
BL
P
P
C166
5
6
BL-GN
5
6
P

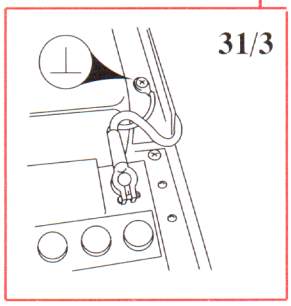
31/3

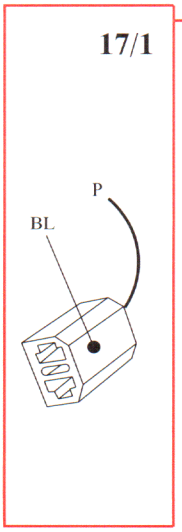
17/1
P
BL

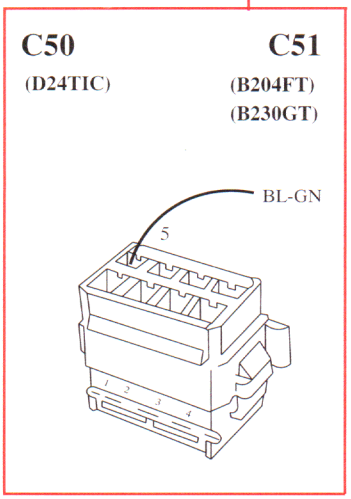
C50
(D24TIC)
C51
(B204FT)
(B230GT)
BL-GN
5

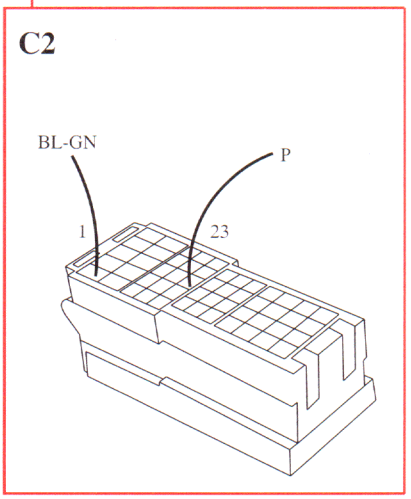
C2
BL-GN
P
1
23

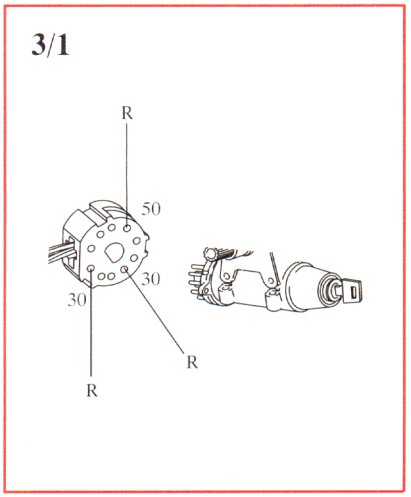
3/1
R
50
30
30
R
R