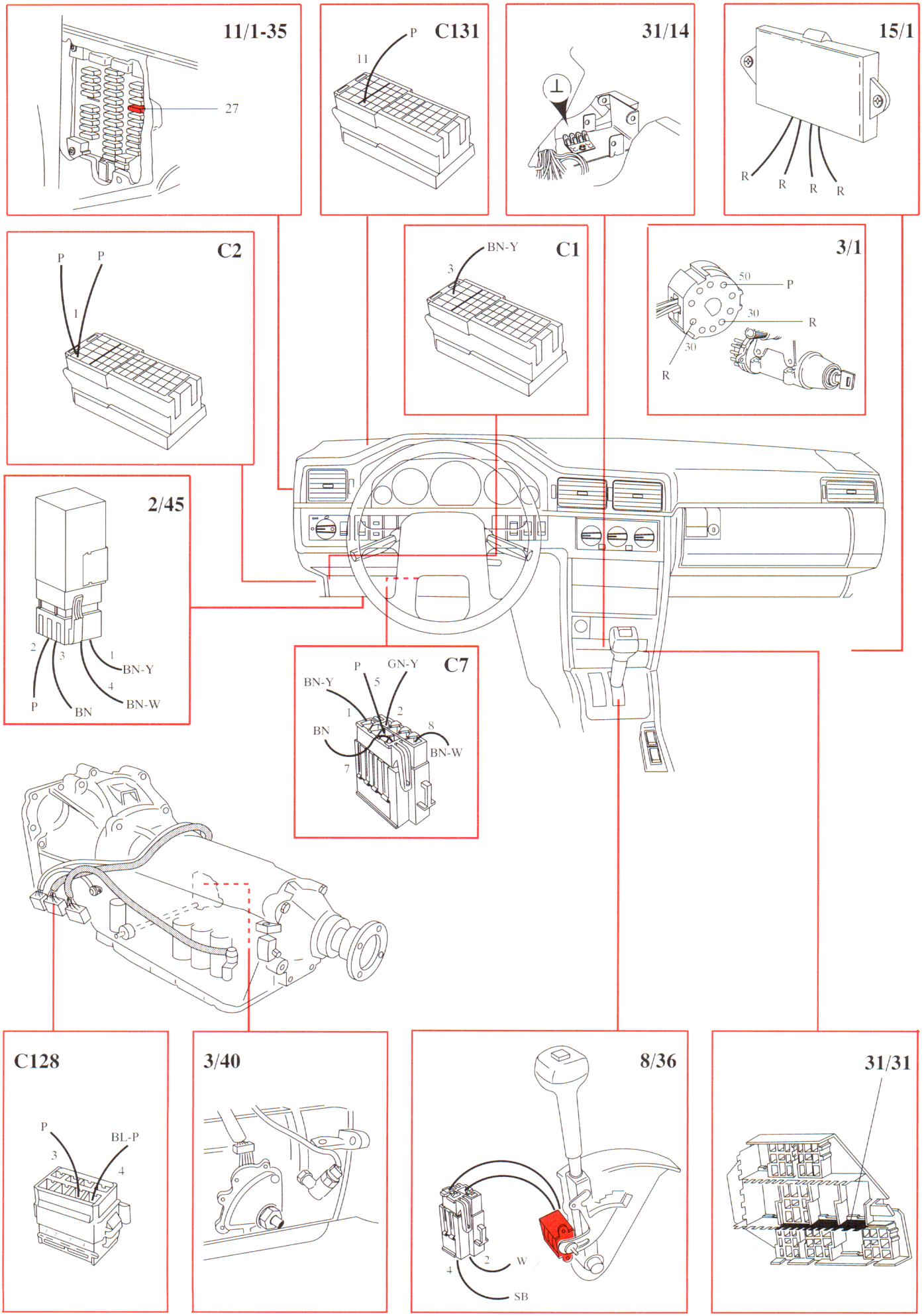
11/1-35
27
C131
P
11
31/14
15/1
R
R
R
R
C2
P
P
1
C1
BN-Y
3
3/1
50
P
30
R
30
R
2/45
2
3
1
BN-Y
4
P
BN
BN-W
C7
P
GN-Y
BN-Y
5
1
2
BN
8
BN-W
7
C128
P
BL-P
3
4
3/40
8/36
2
W
4
SB
31/31