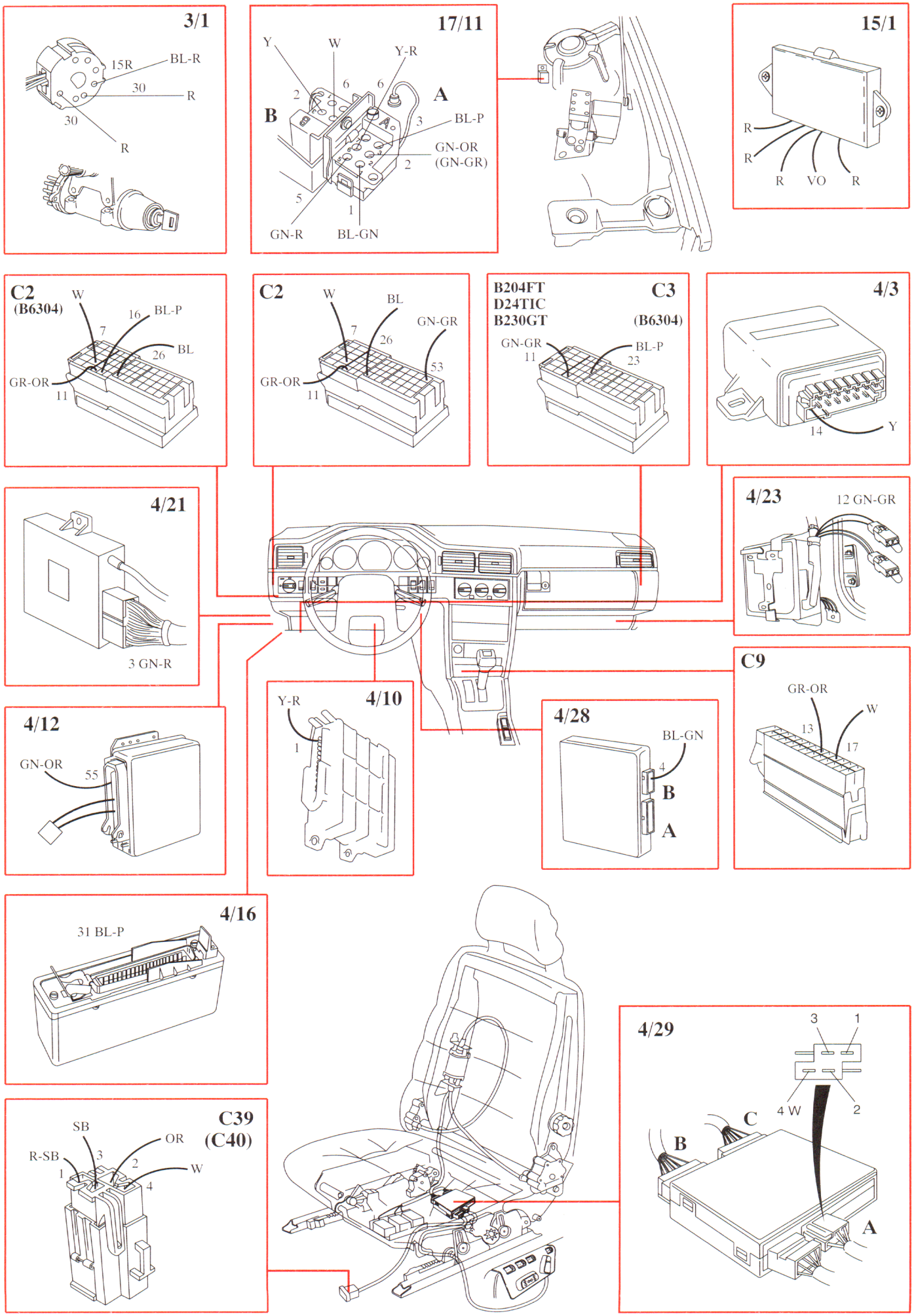
3/1
15R
BL-R
30
R
30
R
17/11
Y
W
Y-R
2
6
6
A
B
3
BL-P
GN-OR
(GN-GR)
2
5
1
GN-R
BL-GN
15/1
R
R
R
VO
R
C2
(B6304)
W
16
BL-P
7
26
BL
GR-OR
11
C2
W
BL
GN-GR
7
26
53
GR-OR
11
B204FT
D24TIC
B230GT
C3
(B6304)
GN-GR
11
BL-P
23
4/3
14
Y
4/21
3 GN-R
4/23
12 GN-GR
C9
GR-OR
W
13
17
4/12
GN-OR
55
Y-R
4/10
1
4/28
BL-GN
4
B
A
4/16
31 BL-P
4/29
3
1
4 W
2
C
B
A
C39
(C40)
SB
OR
R-SB
3
2
1
W
4