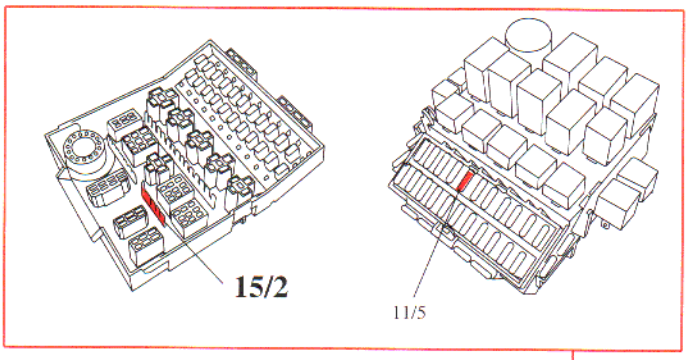
15/2
11/5

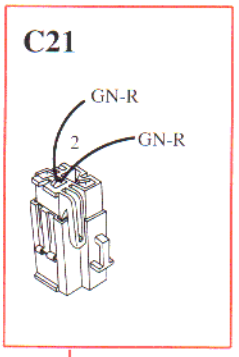
C21
GN-R
2
GN-R

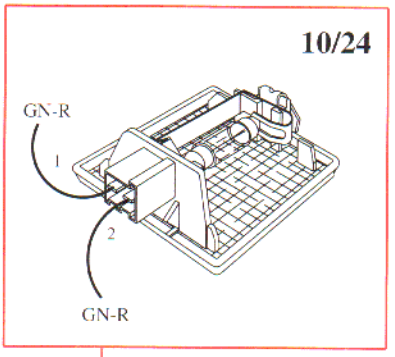
10/24
GN-R
1
2
GN-R

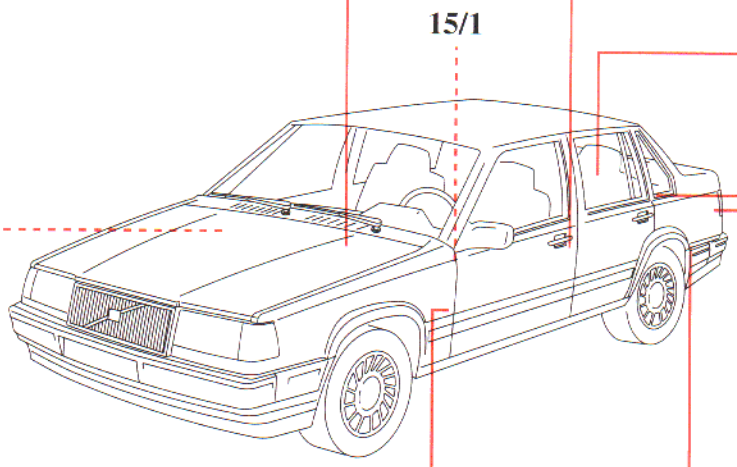
15/1

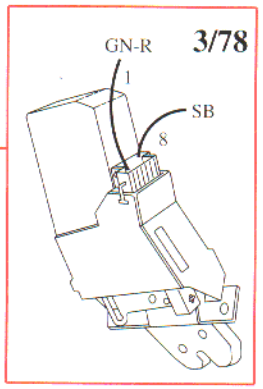
GN-R
3/78
1
SB
8

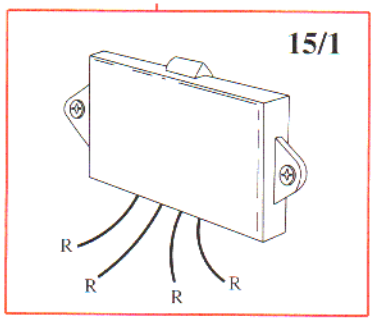
15/1
R
R
R
R

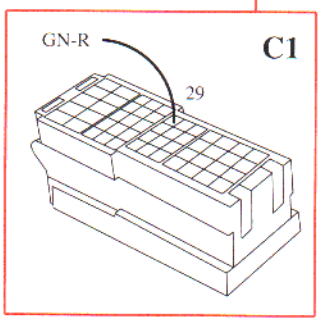
GN-R
C1
29

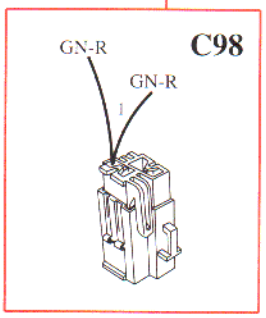
GN-R
C98
GN-R
1

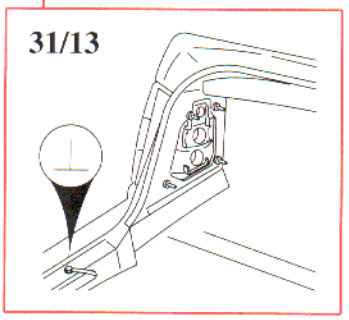
31/13

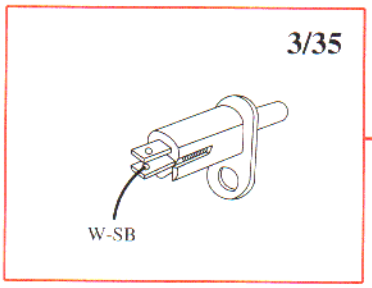
3/35
W-SB

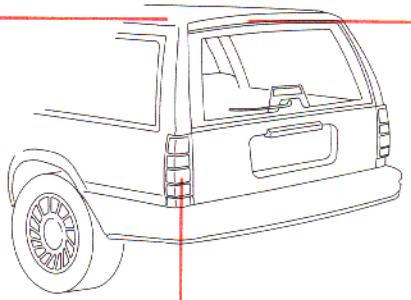

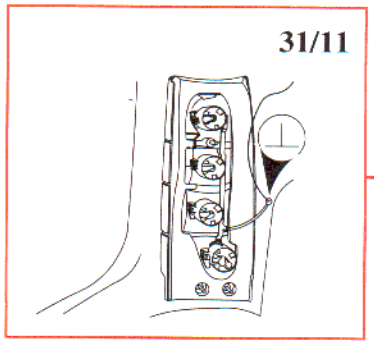
31/11

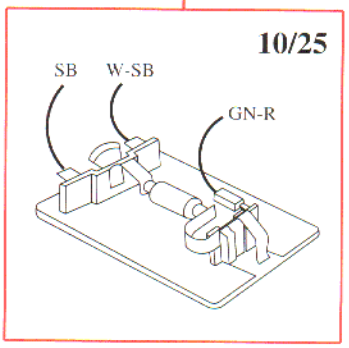
10/25
SB
W-SB
GN-R