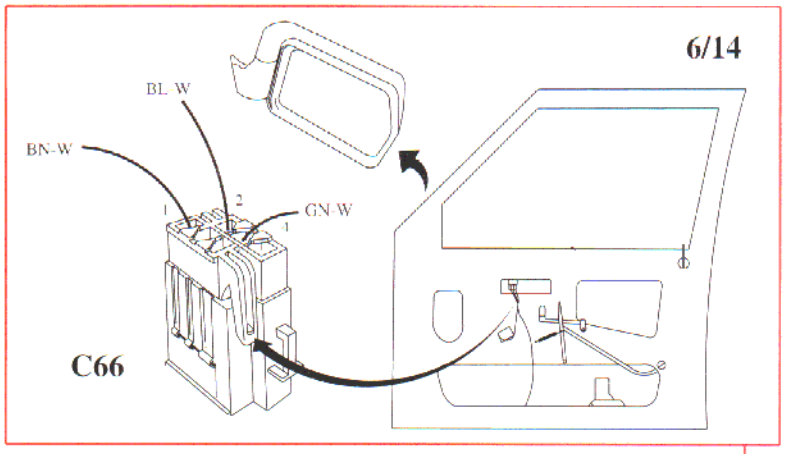
6/14
BL-W
BN-W
GN-W
1
2
4
C66

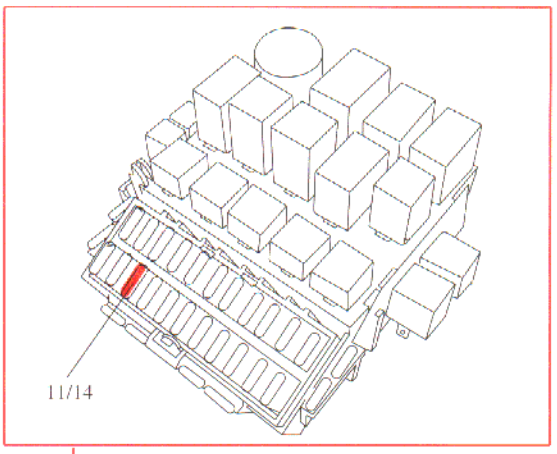
11/14

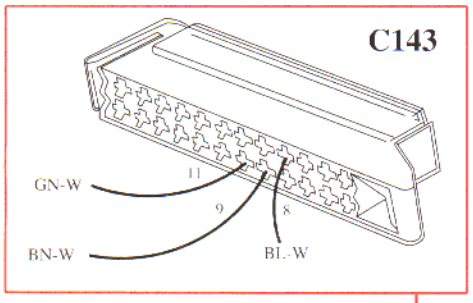
C143
GN-W
BN-W
BL-W
11
9
8

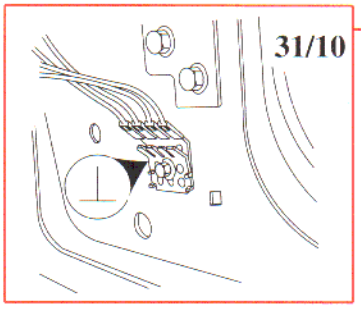
31/10

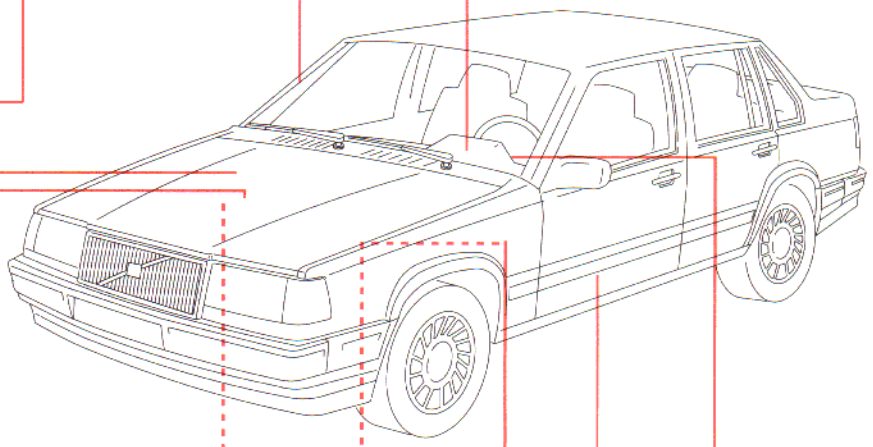

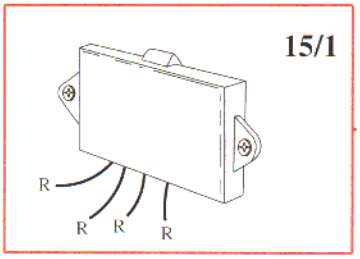
15/1
R
R
R
R

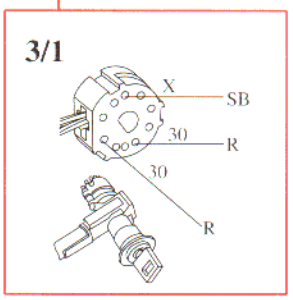
3/1
X
SB
30
R
30
R

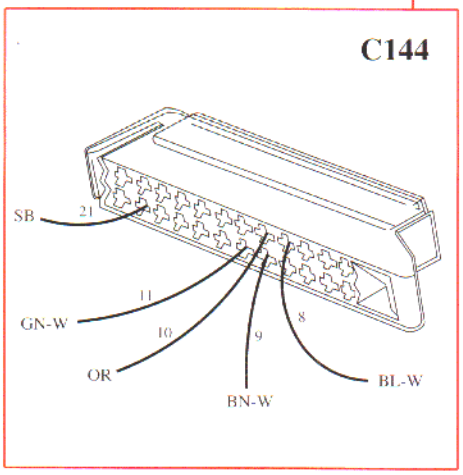
C144
SB
21
GN-W
11
10
OR
9
BN-W
8
BL-W

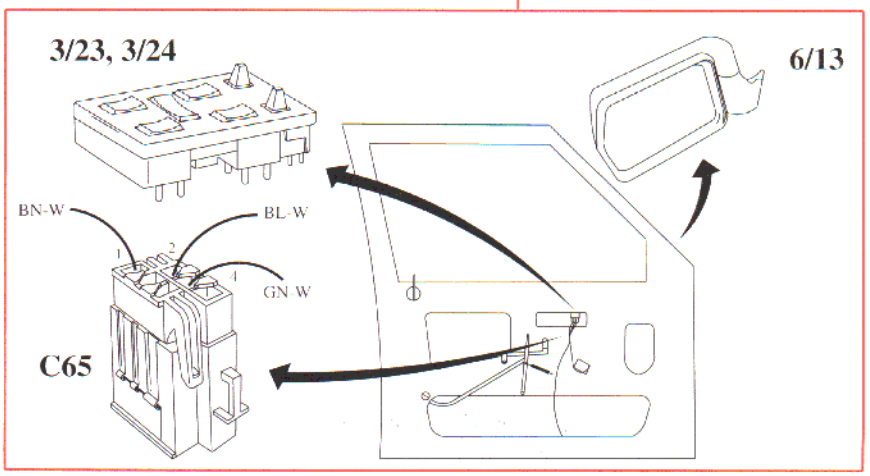
3/23, 3/24
6/13
BN-W
BL-W
GN-W
1
2
4
C65