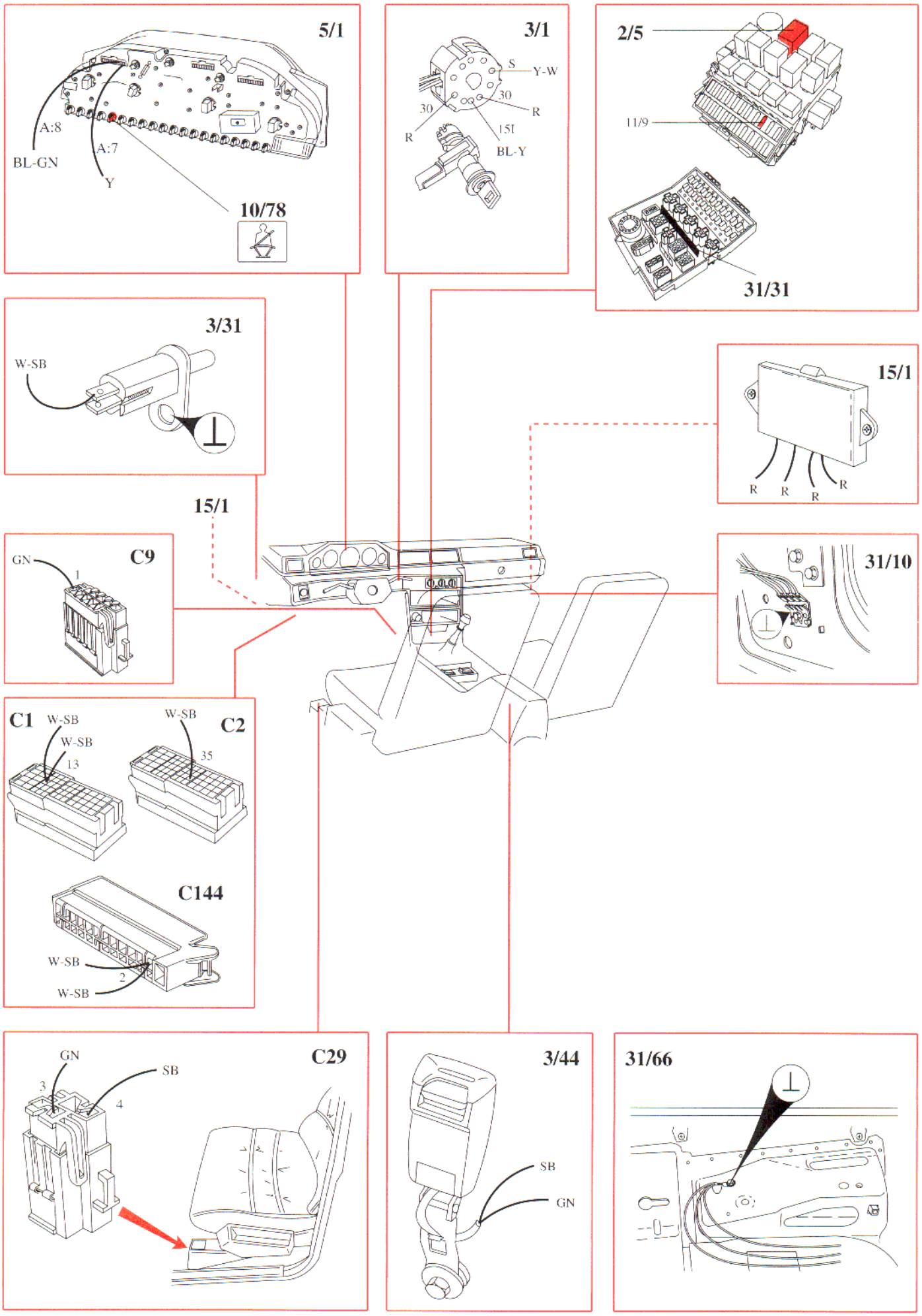
5/1
A:8
A:7
BL-GN
Y
10/78
3/1
S
Y-W
30
R
30
R
15I
BL-Y
2/5
11/9
31/31
3/31
W-SB
15/1
R
R
R
R
15/1
C9
GN
1
31/10
C1
W-SB
W-SB
13
W-SB
C2
35
C144
W-SB
2
W-SB
C29
GN
SB
3
4
3/44
SB
GN
31/66