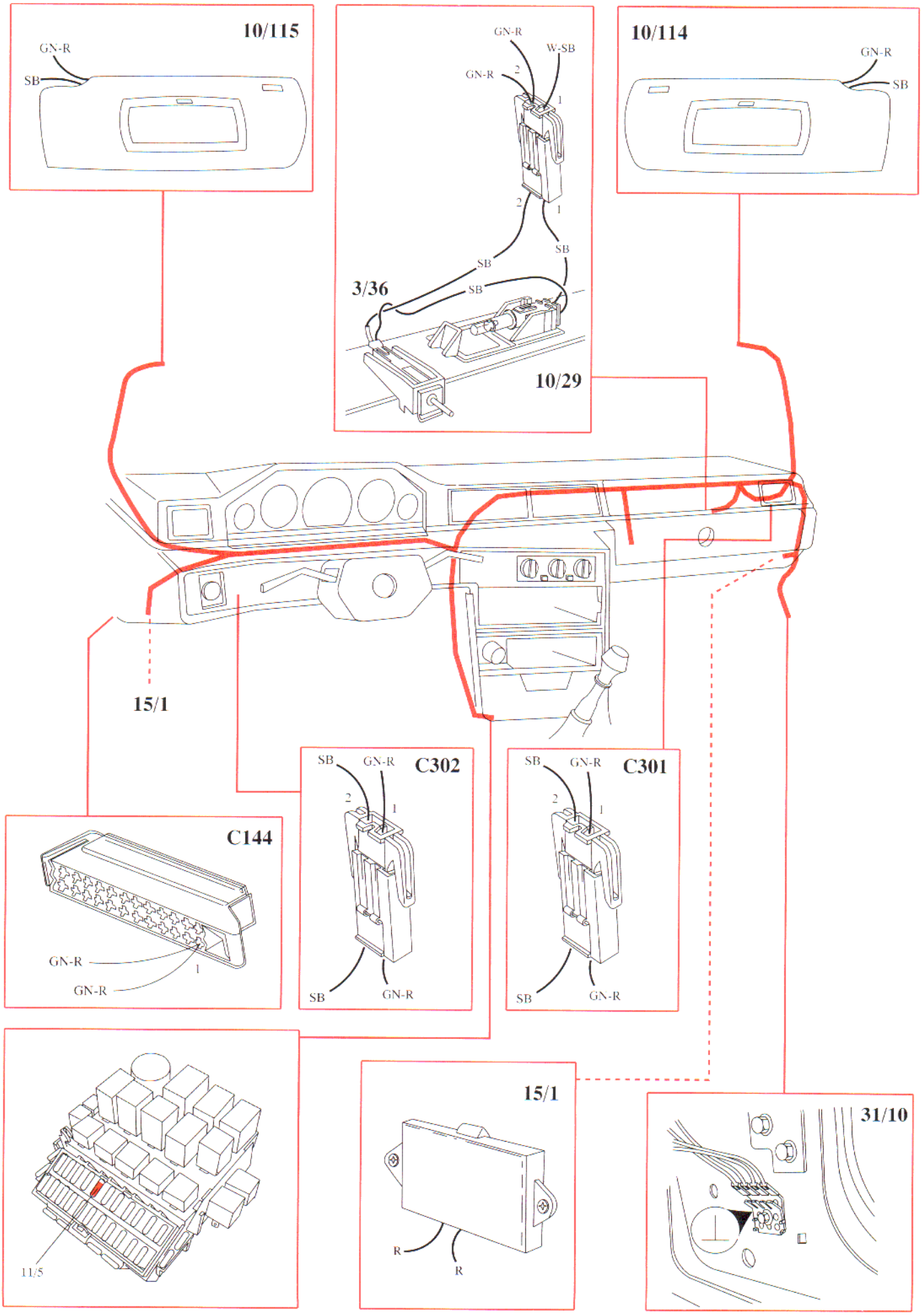
10/115
GN-R
SB
10/114
GN-R
SB
GN-R
W-SB
GN-R
2
1
2
1
SB
SB
SB
3/36
10/29
15/1
C302
SB
GN-R
2
1
SB
GN-R
C301
SB
GN-R
2
1
SB
GN-R
C144
GN-R
1
GN-R
11/5
15/1
R
R
31/10