Ground connections

31/1

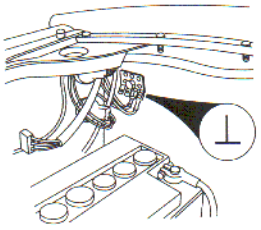

Right front light
Right turn signal, front
Right parking light, front
(Washer motors)
(Washer fluid level sensor)
Heated oxygen sensor (HO2S) pre-heating
(Relay, radio interference
suppression)
Right headlight wiper motor
(Hydraulic unit, ABS)
Right front fog light
Right beam width control
(Low-speed pressure sensor, engine cooling fan)
(High-speed pressure sensor, engine cooling fan)

31/3

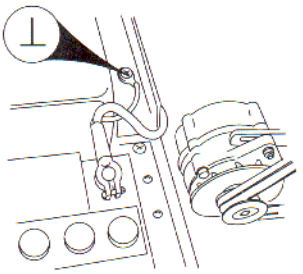

Ground connection
battery-body

31/4

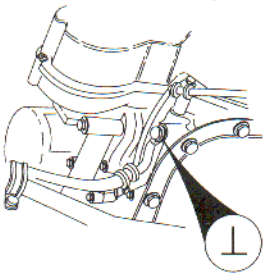

Ground connection
battery-engine

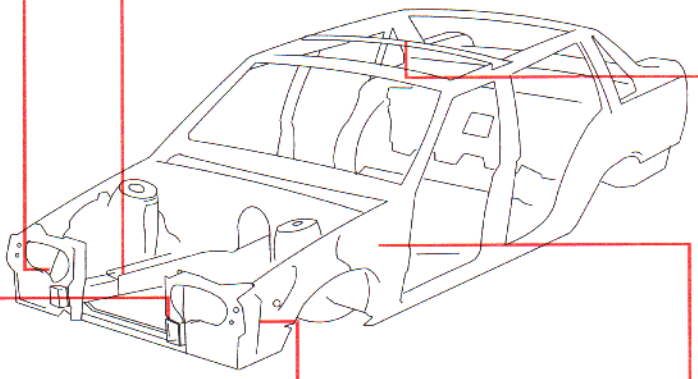

31/5

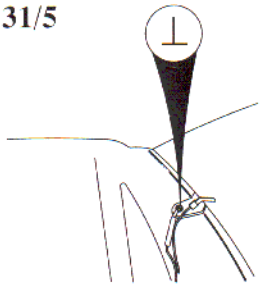

Heated rear window

31/2

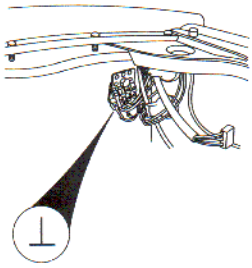

Left front light
Left turn signal, front
Left parking light, front
Headlight wiper motor, left
(Relay, radio interference suppression)
(Wiper motors)
(Washer fluid level sensor)
Left turn signal side repeater
Brake fluid level sensor
(Hydraulic unit, ABS)
Left front fog light
Relay, glow plug mechanism
Left beam width control
OBD data link connector
(Low-speed pressure sensor, engine cooling fan)
(High-speed pressure sensor, engine cooling fan)

31/6

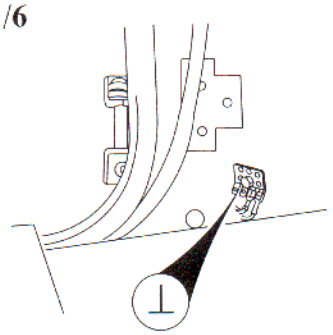

Control module, ABS
Speedometer
Control module, cruise control

31/12

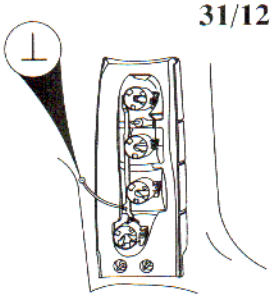

Right tail light

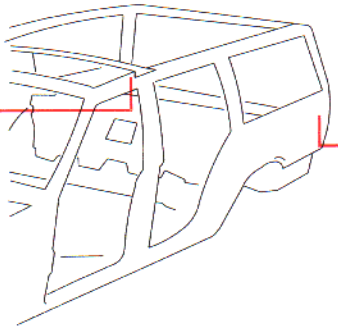

31/11

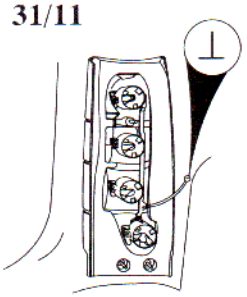

Left tail light
Extra brake light
Power antenna
Tailgate wiper motor
Trunk lighting
Number plate lighting
Fuel primer pump (LH-2.4) (MFI)
Fuel pump (Regina) (MFI)
Interior lighting
Reading lights
Towing hook
CD-autochanger