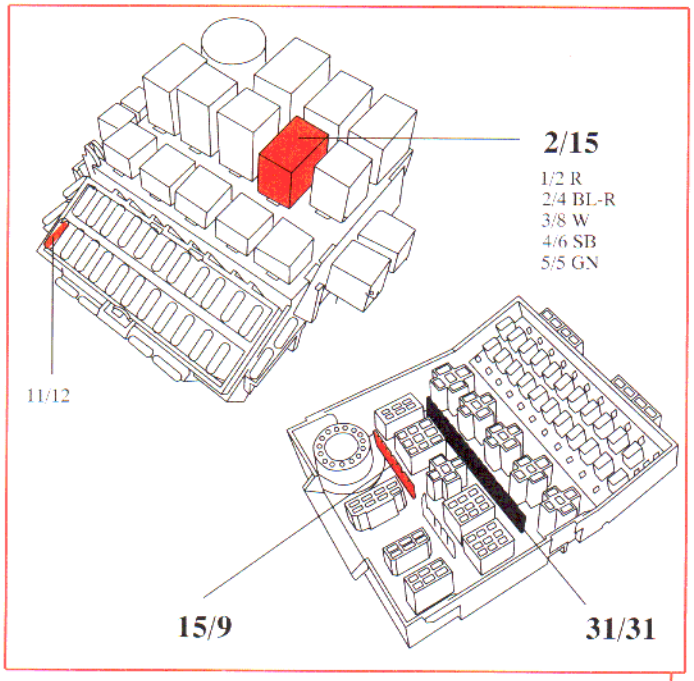
2/15
1/2 R
2/4 BL-R
3/8 W
4/6 SB
5/5 GN
11/12
15/9
31/31

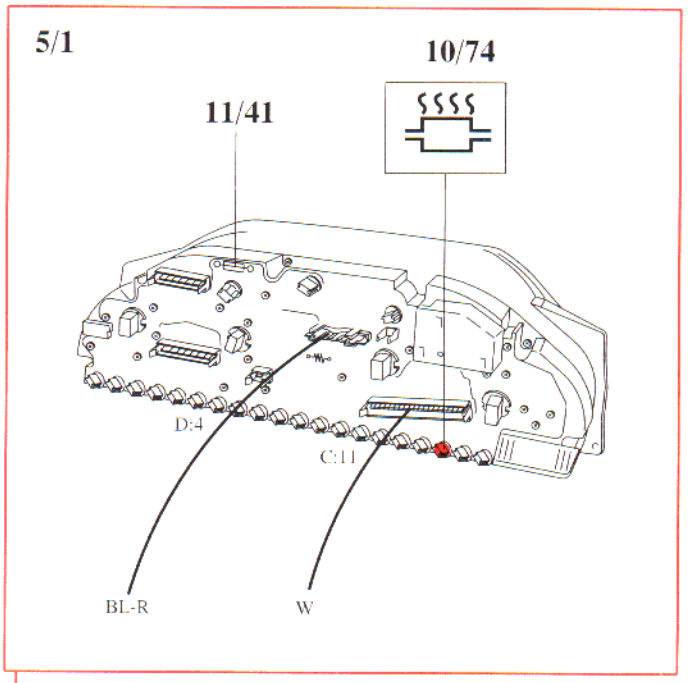
5/1
10/74
11/41
D:4
C:11
BL-R
W

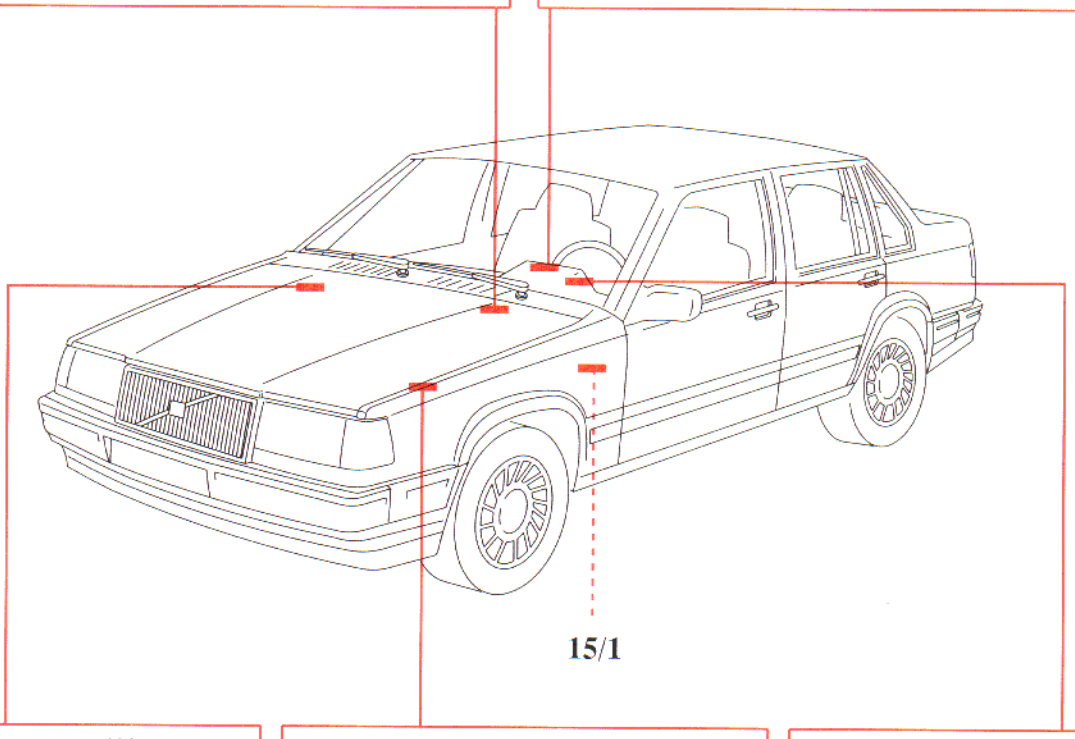
15/1

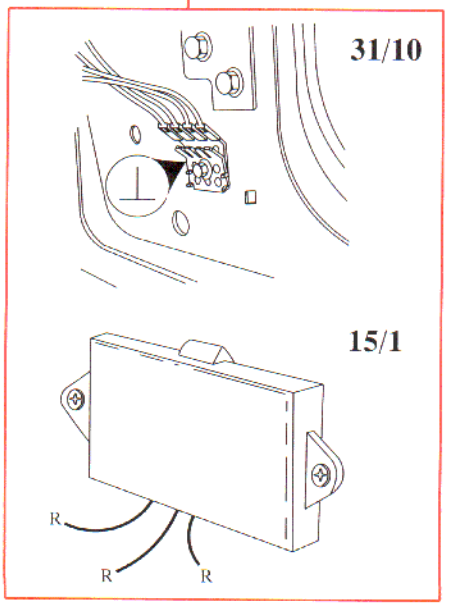
31/10
15/1
R
R
R

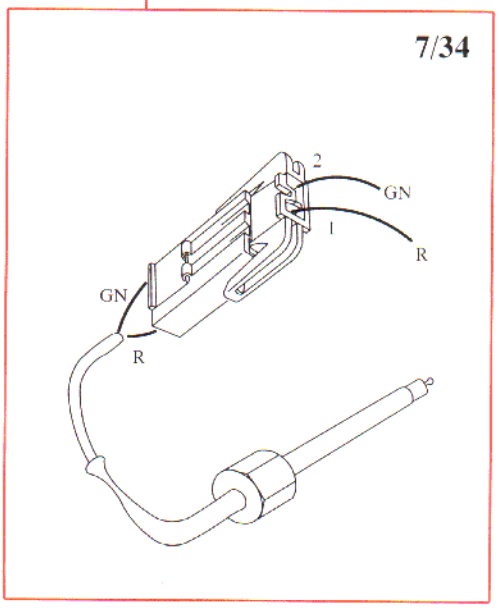
7/34
2
GN
1
R
GN
R

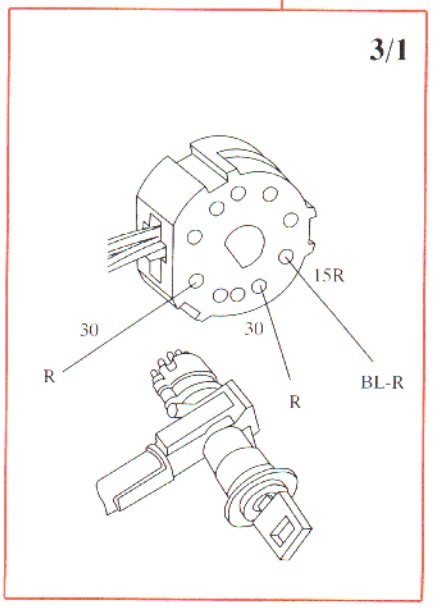
3/1
15R
30
30
R
R
BL-R