Central locking

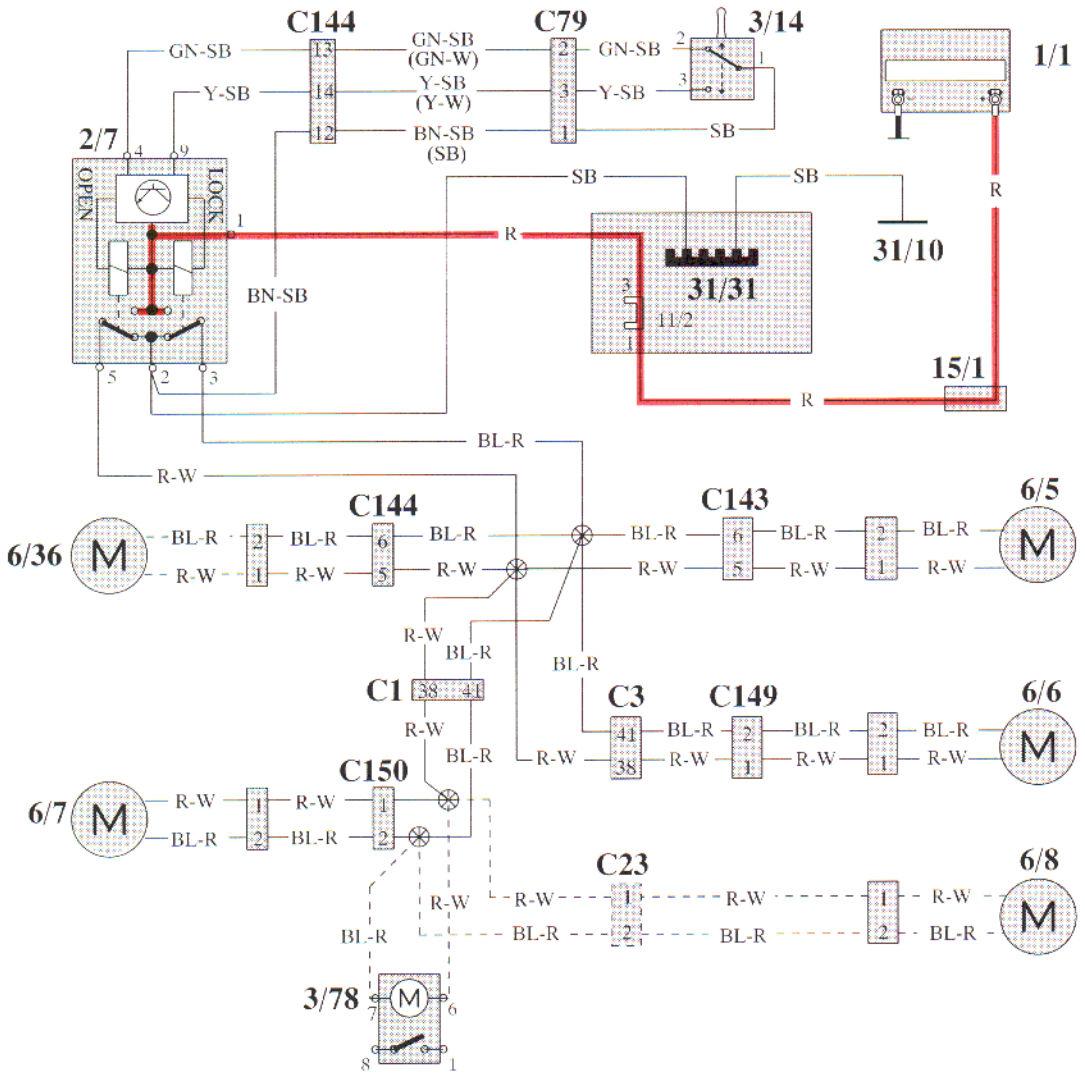

Unlocking with key

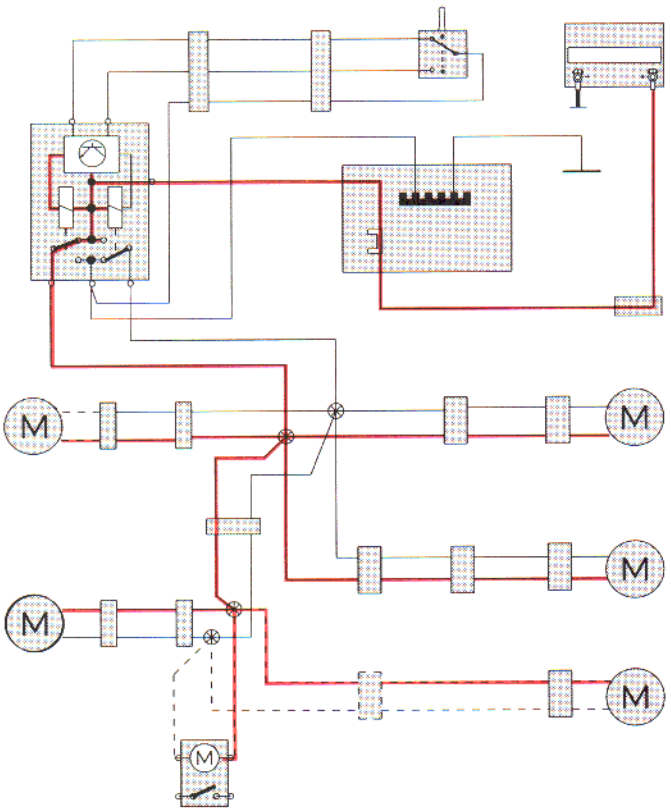
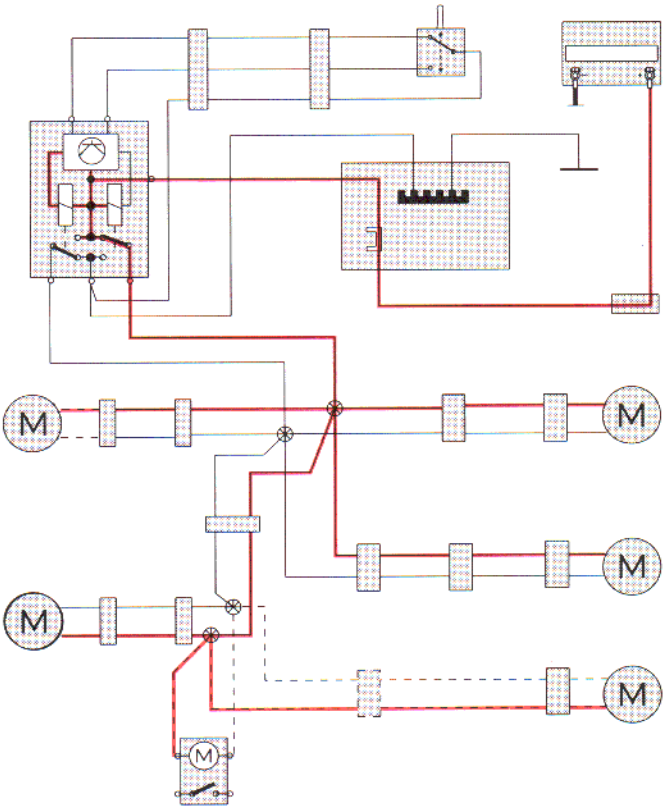
Locking with key