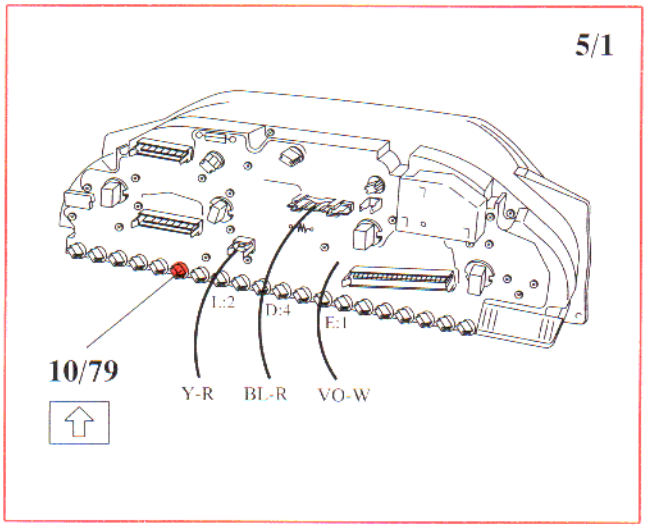
5/1
10/79
1:2
D:4
E:1
Y-R
BL-R
VO-W

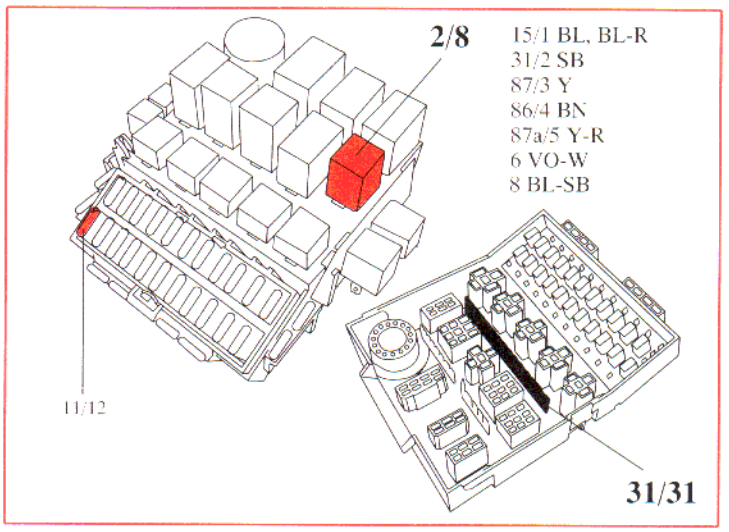
2/8
15/1 BL, BL-R
31/2 SB
87/3 Y
86/4 BN
87a/5 Y-R
6 VO-W
8 BL-SB
11/12
31/31

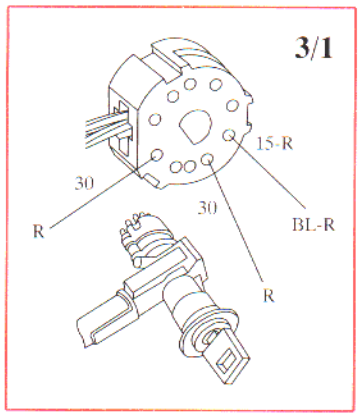
3/1
15-R
30
30
R
BL-R
R

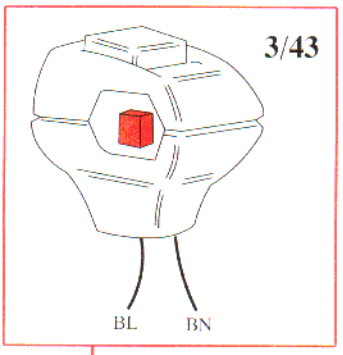
3/43
BL
BN

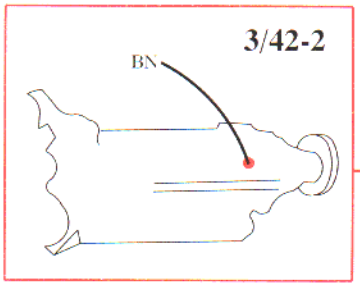
3/42-2
BN

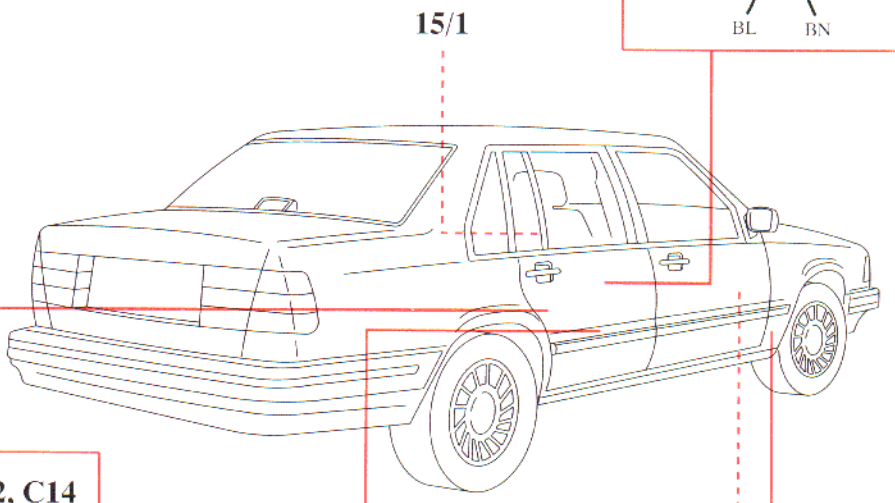
15/1

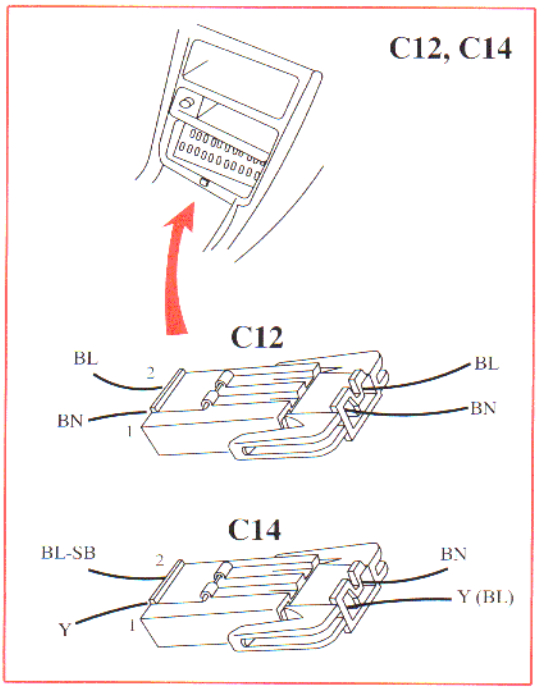
C12, C14
C12
BL
2
BL
BN
1
BN
C14
BL-SB
2
BN
Y
1
Y (BL)

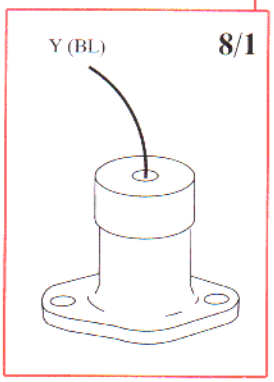
Y (BL)
8/1

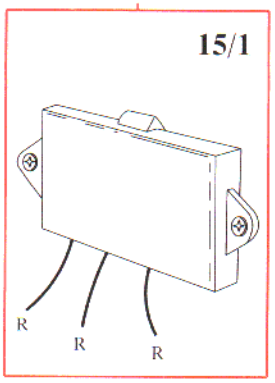
15/1
R
R
R

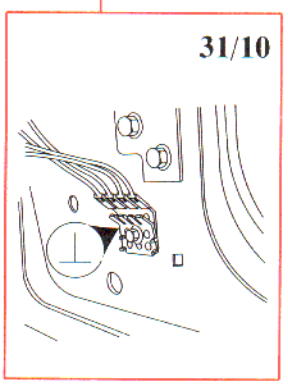
31/10