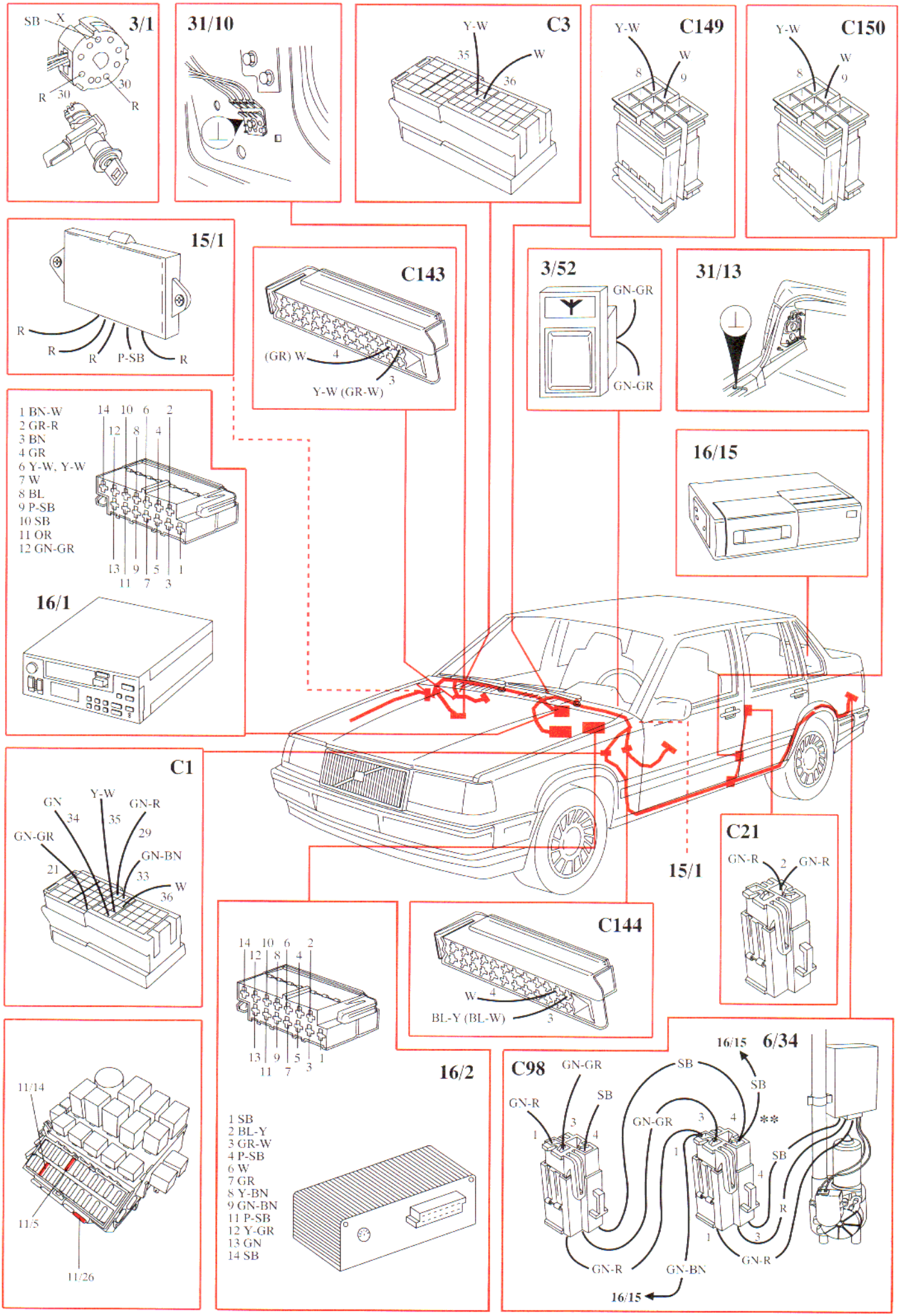
3/1
SB
X
30
R
30
R
31/10
C3
Y-W
35
W
36
C149
Y-W
8
W
9
C150
Y-W
8
W
9
15/1
R
R
R
P-SB
R
C143
(GR) W
4
3
Y-W (GR-W)
3/52
GN-GR
GN-GR
31/13
1 BN-W
2 GR-R
3 BN
4 GR
6 Y-W, Y-W
7 W
8 BL
9 P-SB
10 SB
11 OR
12 GN-GR
14 10 6 2
12 8 4
13 9 5 1
11 7 3
16/15
16/1
C1
GN
34
Y-W
35
GN-R
29
GN-GR
21
GN-BN
33
W
36
15/1
C21
GN-R
2
GN-R
14 10 6 2
12 8 4
13 9 5 1
11 7 3
C144
W
4
BL-Y (BL-W)
3
11/14
11/5
11/26
16/2
1 SB
2 BL-Y
3 GR-W
4 P-SB
6 W
7 GR
8 Y-BN
9 GN-BN
11 P-SB
12 Y-GR
13 GN
14 SB
C98
GN-GR
SB
GN-R
3
4
1
GN-GR
3
4
1
16/15
6/34
SB
SB
**
SB
4
R
1
3
GN-R
GN-BN
GN-R
16/15