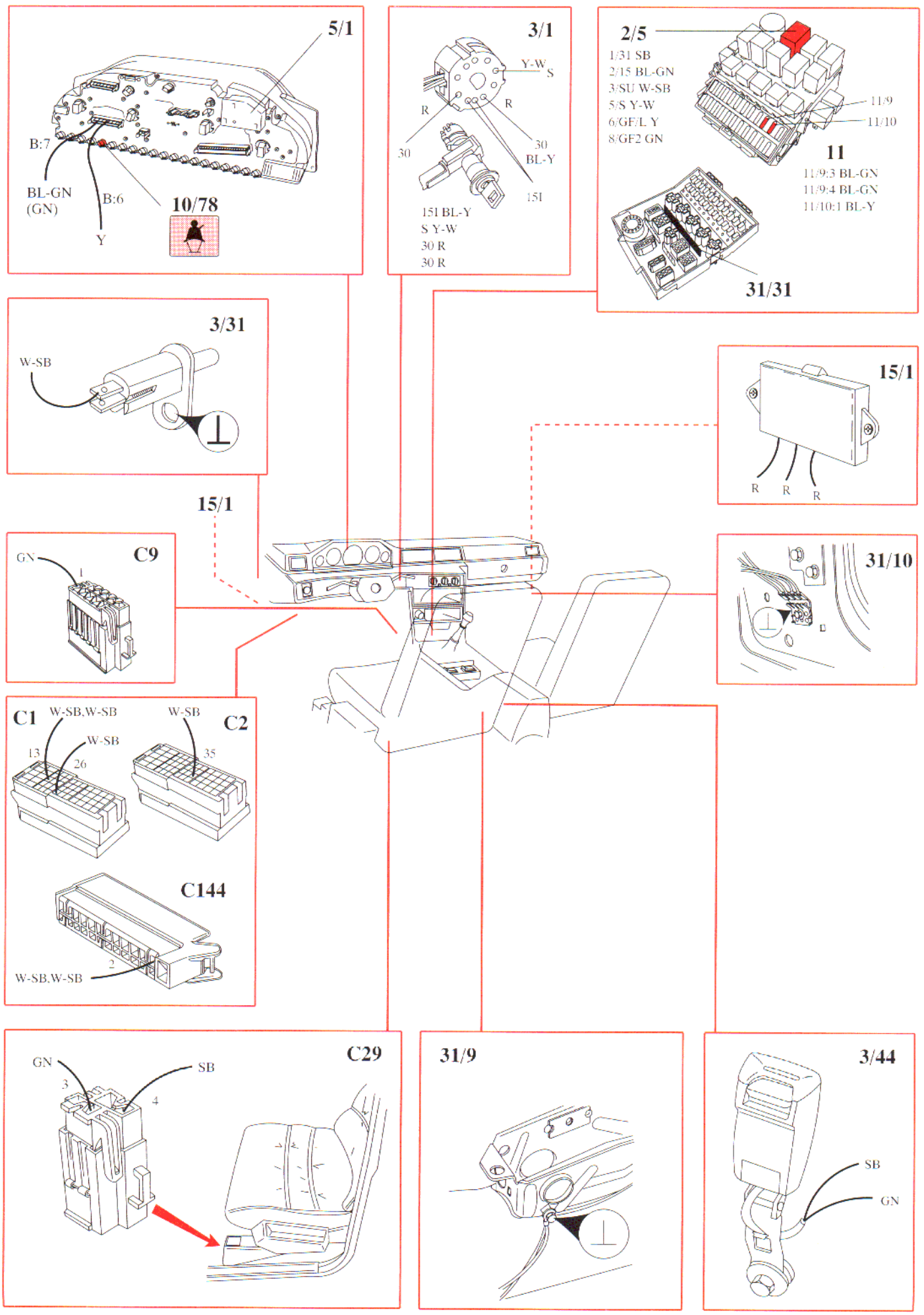
5/1
B:7
BL-GN
(GN)
B:6
Y
10/78
3/1
Y-W
S
R
R
30
30
BL-Y
15I
15I BL-Y
S Y-W
30 R
30 R
2/5
1/31 SB
2/15 BL-GN
3/SU W-SB
5/S Y-W
6/GF/L Y
8/GF2 GN
11/9
11/10
11
11/9:3 BL-GN
11/9:4 BL-GN
11/10:1 BL-Y
31/31
3/31
W-SB
15/1
R
R
R
15/1
GN
C9
C1
W-SB,W-SB
W-SB
13
26
W-SB
35
C2
C144
2
W-SB,W-SB
31/10
C29
GN
SB
3
4
31/9
3/44
SB
GN