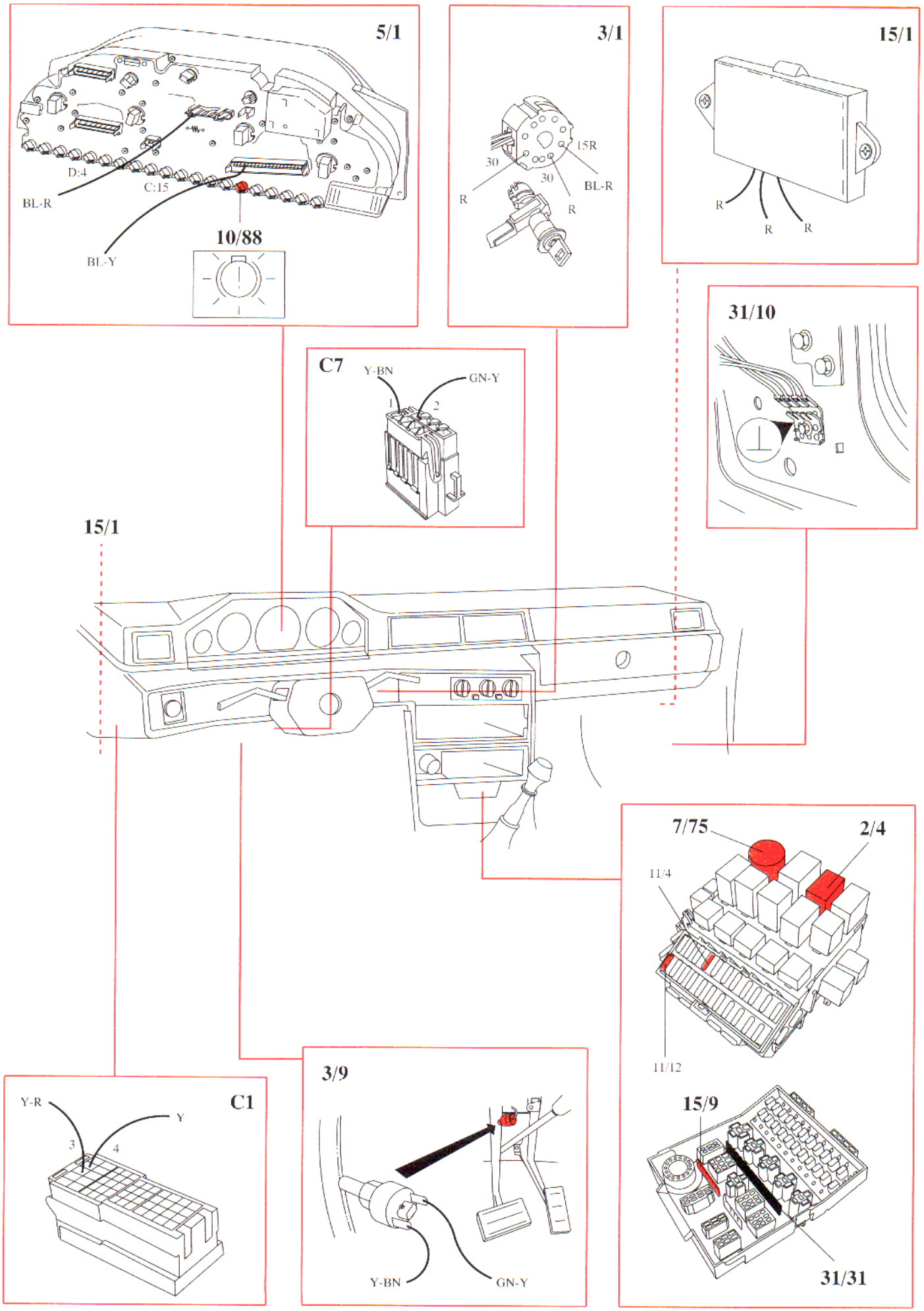
5/1
D:4
C:15
BL-R
BL-Y
10/88
3/1
30
15R
30
BL-R
R
R
15/1
R
R
R
31/10
C7
Y-BN
GN-Y
1
2
15/1
7/75
2/4
11/4
11/12
15/9
31/31
C1
Y-R
Y
3
4
3/9
Y-BN
GN-Y